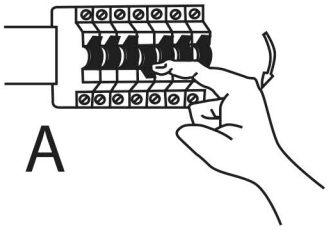
A

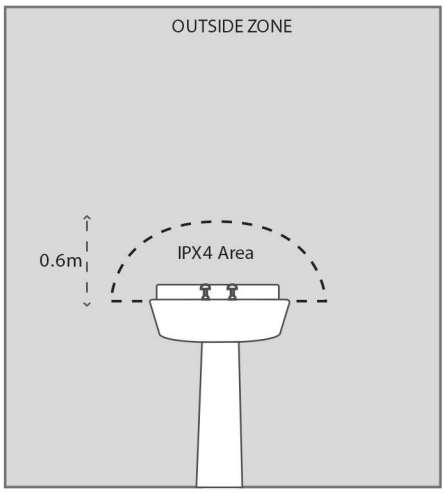
OUTSIDE ZONE
0.6m
IPX4 Area

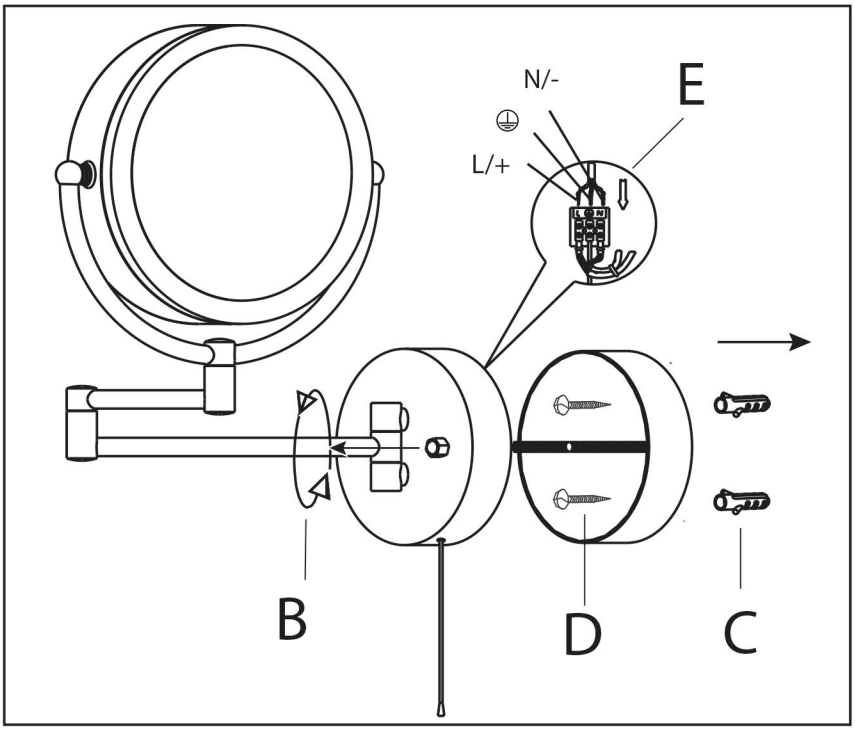
N/-
E
L/+
B
D
C

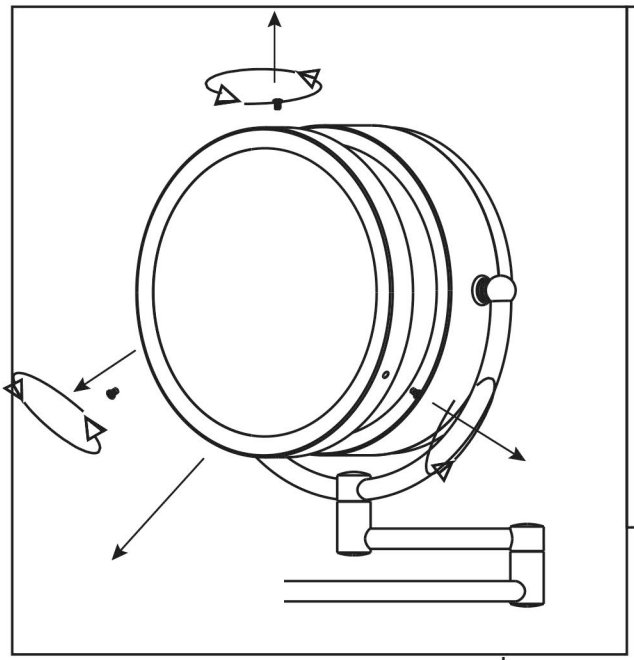

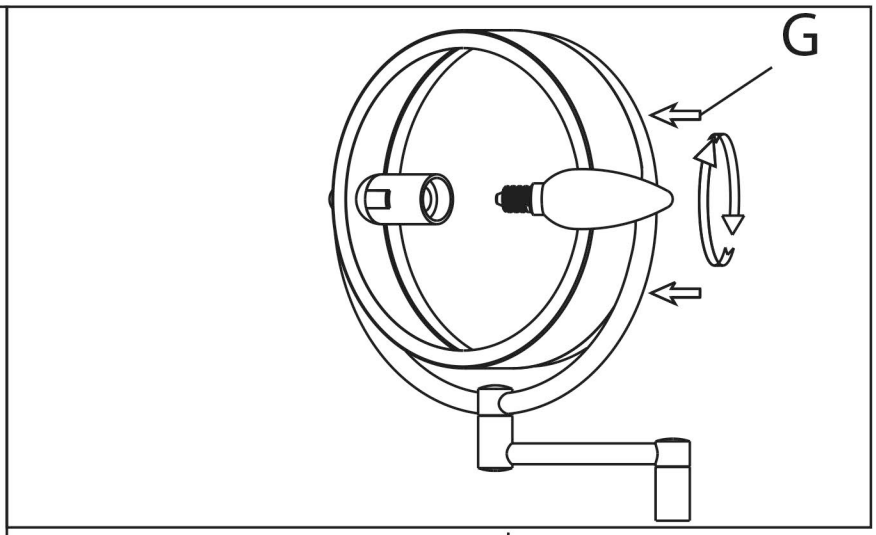
G

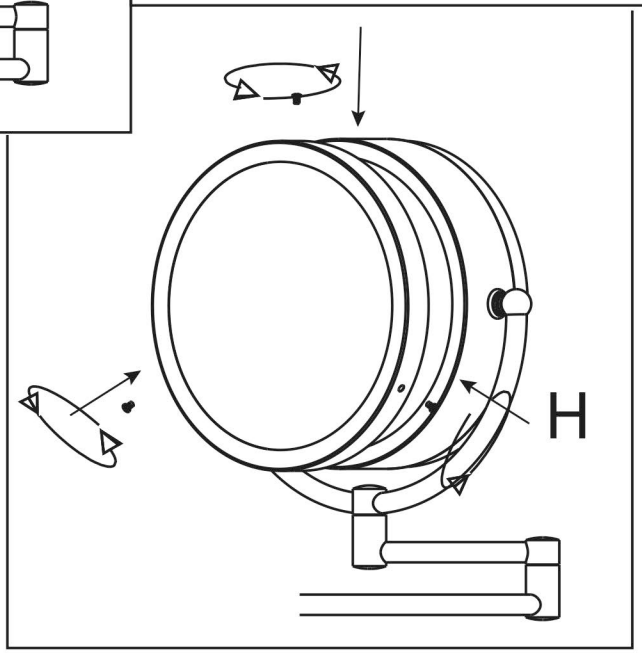
H

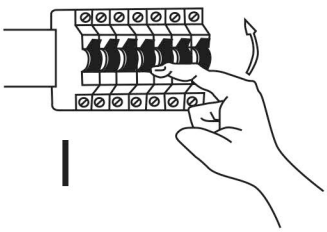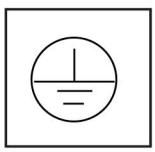
I