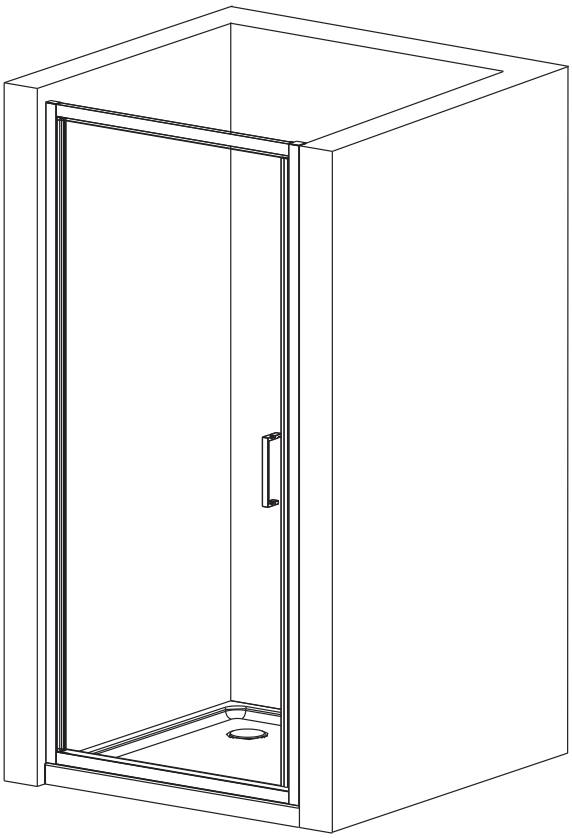

HINGED DOOR BeBa_26007/BeBa_26008/BeBa_26009

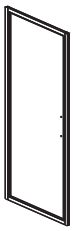

[01]fx1

[04]x2

[16]x6

[09]x1

[14]ax1

[14]bx1

[15]x2

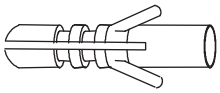

[17]x6

[18]x3

[13]ax1

[13]bx1

(St4x10mm)

[21]x6

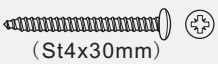

(St4x30mm)

[24]x6

You will need

To assemble your product (Tools not provided).

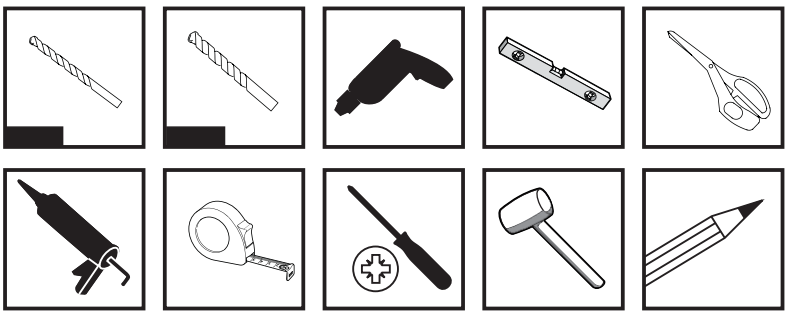

1 helper for some tasks

Things to check before you start

- Check the pack and ensure that you have all of the parts listed.
- When you are ready to start, make sure you have the right tools to hand, plenty of space and a dry area for assembly.
- Ensure that the mounting surface is sound, clean and dry before the enclosure is installed.
- Ensure that the enclosure is ftted to a level tray or foor and vertical walls.
- The enclosure is designed to allow for 20mm adjustment when ftted to ‘out of true walls’ .
- The thickness of the tiles used will affect the overall position of the enclosure on the tray.
- When drilling through ceramic tiles use a specialist drill bit.
- Where possible drill between tiles in the grout.
- When working near a tray or bath, ensure that the waste is covered so that small parts do not fall down it.
- Please note: The wall plugs included with this product are suitable for solid walls only. Other wall types may require specialist fxings or wall plugs (not provided). Always ensure that wall plugs or fttings are correct for the wall type. If in doubt seek professional advice.
- Please note that although these instructions are comprehensive, it is always recommended that a technically competent installer should undertake the installation.

Safety

- For domestic use only.
- Care should be taken when drilling into walls to avoid any hidden pipes or wires.
- **CAUTION:** Fragile - please handle all glass with care. This product may cause personal injury, property damage or break easily if not handled, positioned and installed with care. Any damage to the edges, or scratches to the surface that occur during assembly or normal use can cause the glass to break suddenly. Tempered glass will shatter into very small pieces that will still have sharp edges.
- Do not strike the glass with hard or pointed items.
- Do not attempt to cut the glass.
- **CAUTION:** Always ensure the product is securely installed before use.
- **CAUTION**: DO NOT overtighten the fxings otherwise it may damage the product.

WARNING: Failure to follow these instructions may result in personal injury, damage to the product and property damage.

1. Regularly check moving parts such as rollers and hinges to ensure they are secure and adjusted correctly. Tighten and adjust where required. Also check all sealed joints to ensure seal has not deteriorated. Re-seal if required.

2. Clean with warm soapy water and a soft damp cloth to keep the glass clean. Wipe dry with a clean cloth. Glass cleaner can be used if required. Scourers, abrasives and chemical cleaners can damage the glass and pattern, and should not be used.

3. In hard water areas, insoluble lime salts may be deposited on the glass. If this is allowed to build up it becomes increasingly difficult to remove and looks unsightly. Regular cleaning will minimize this effect.

IMPORTANT - RETAIN THIS INFORMATION FOR FUTURE REFERENCE : READ CAREFULLY

01

[04]x2

	X
760mm	735-775mm
800mm	775-815mm
900mm	875-915mm

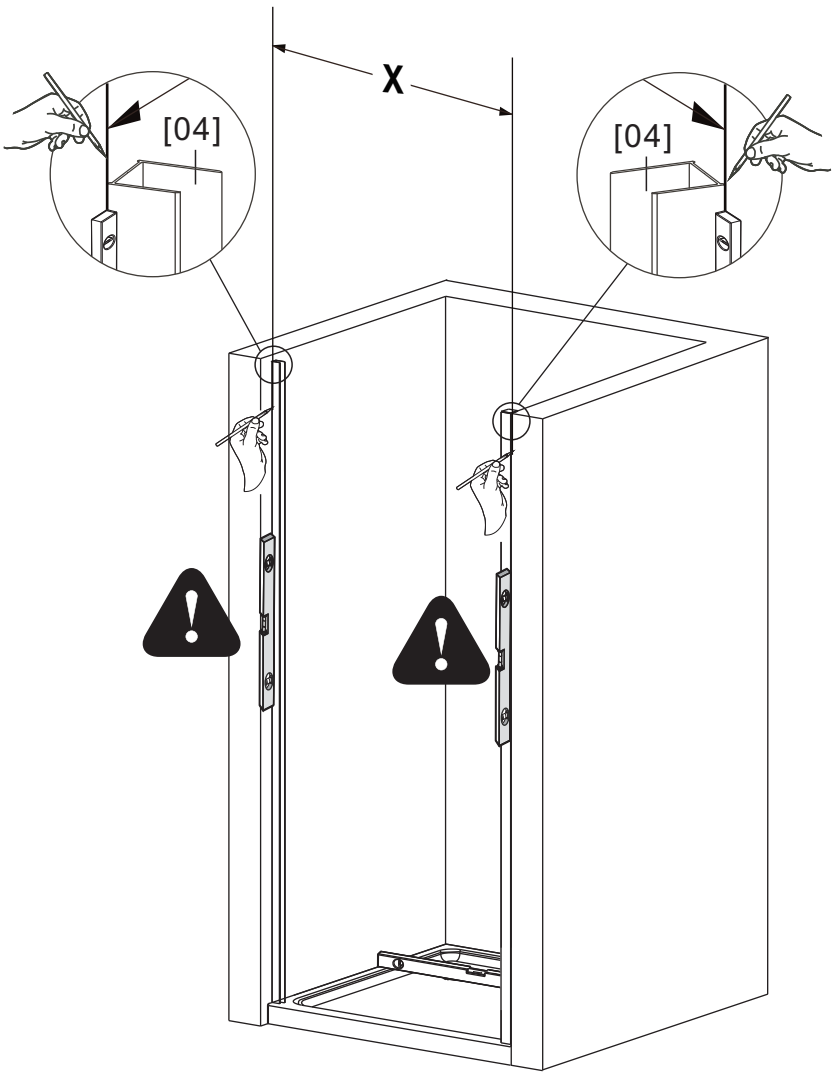

02

[04]x1

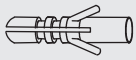

[17]x6

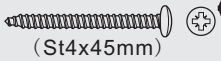

（St4x45mm）

[24]x3

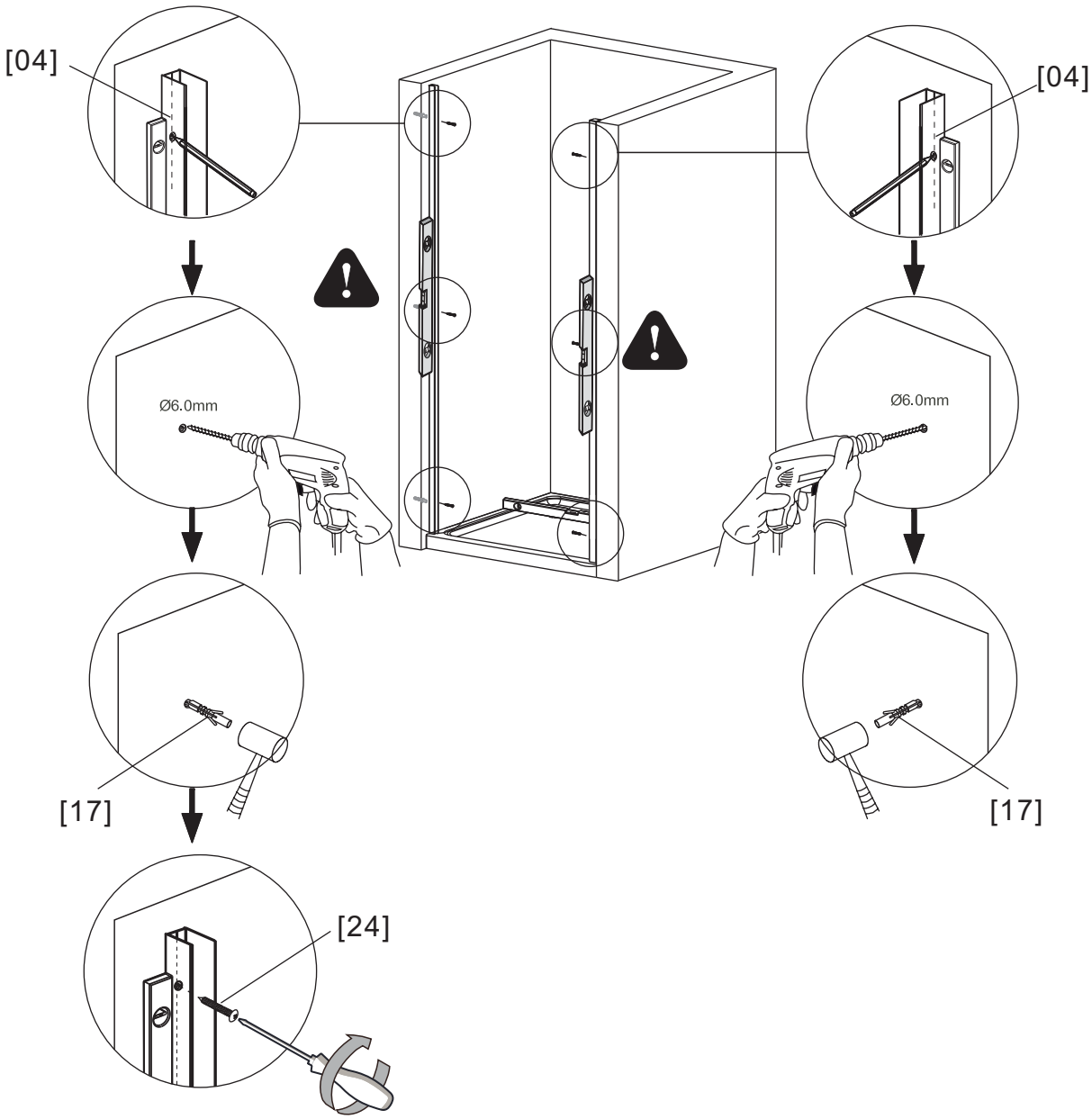

03

[01]fx1

[04]x1

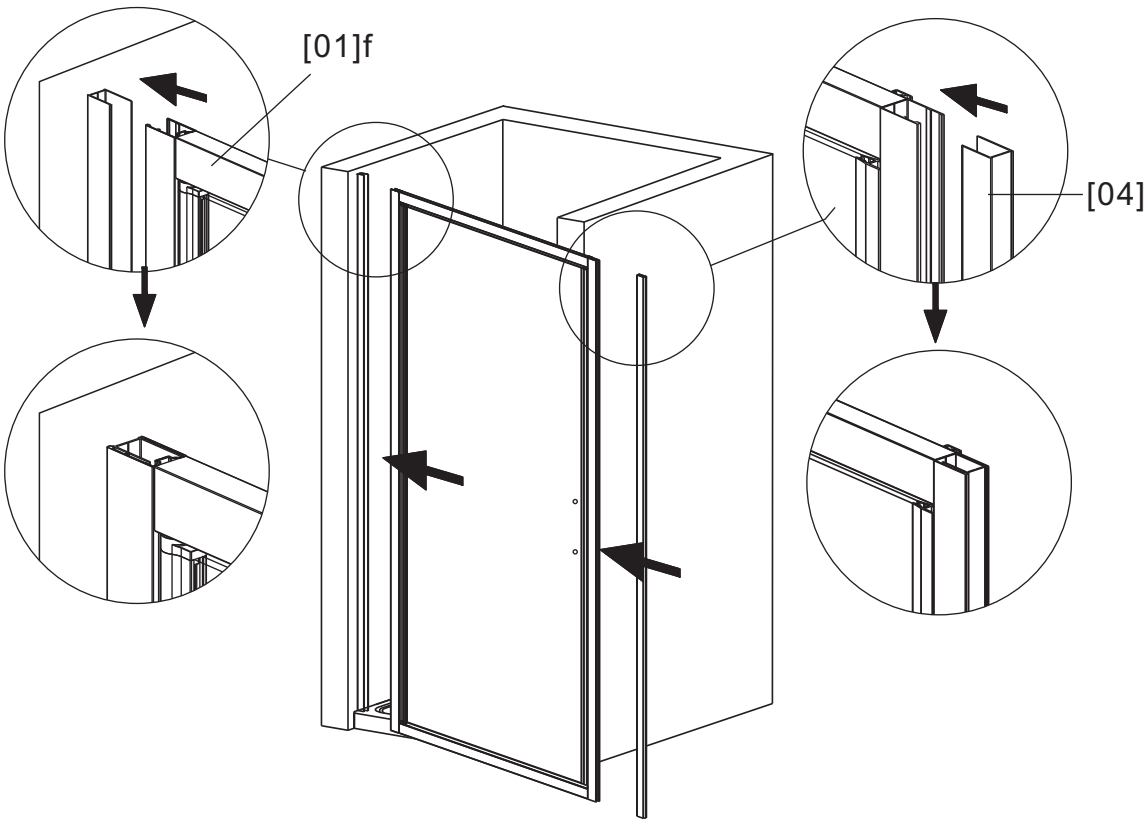

04

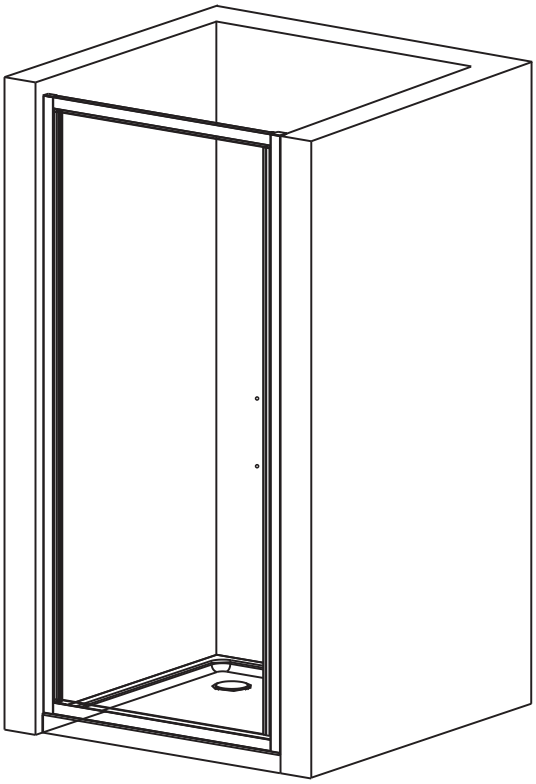

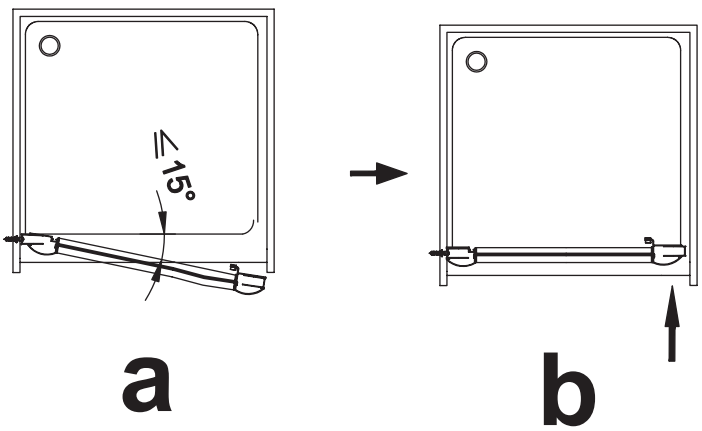

05

[18]x3

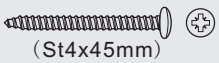

（St4x45mm）

[24]x3

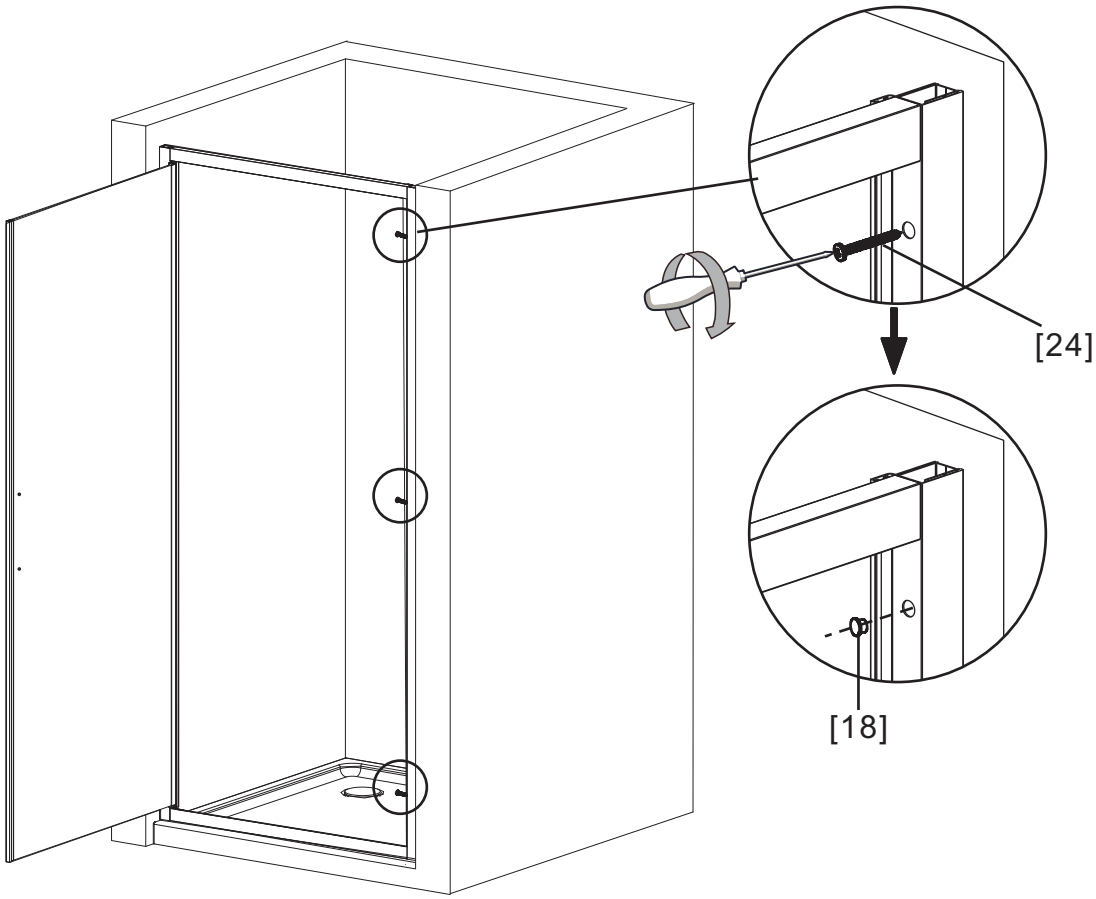

06

[16]x6

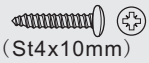

(St4x10mm)

[21]x6

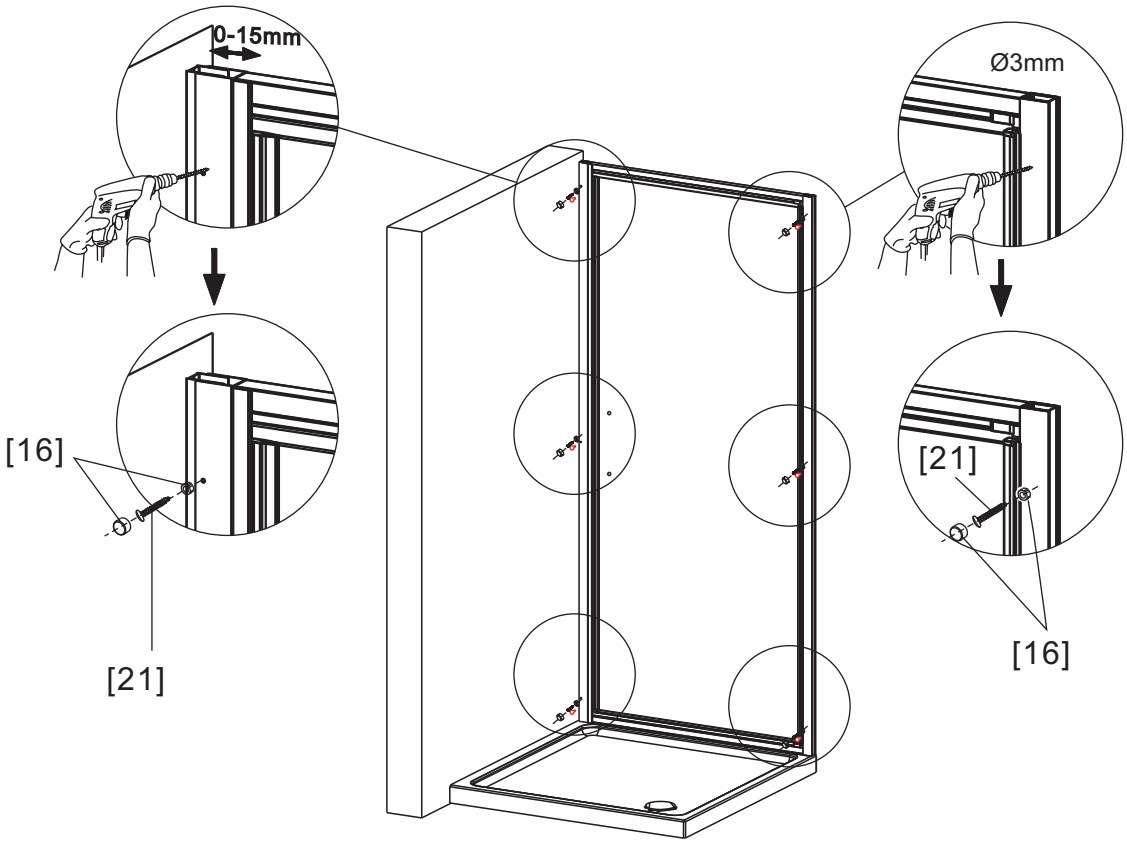

07

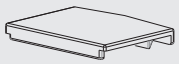

[14]ax1

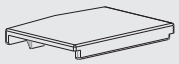

[14]bx1

[15]x2

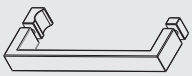

[09]x1

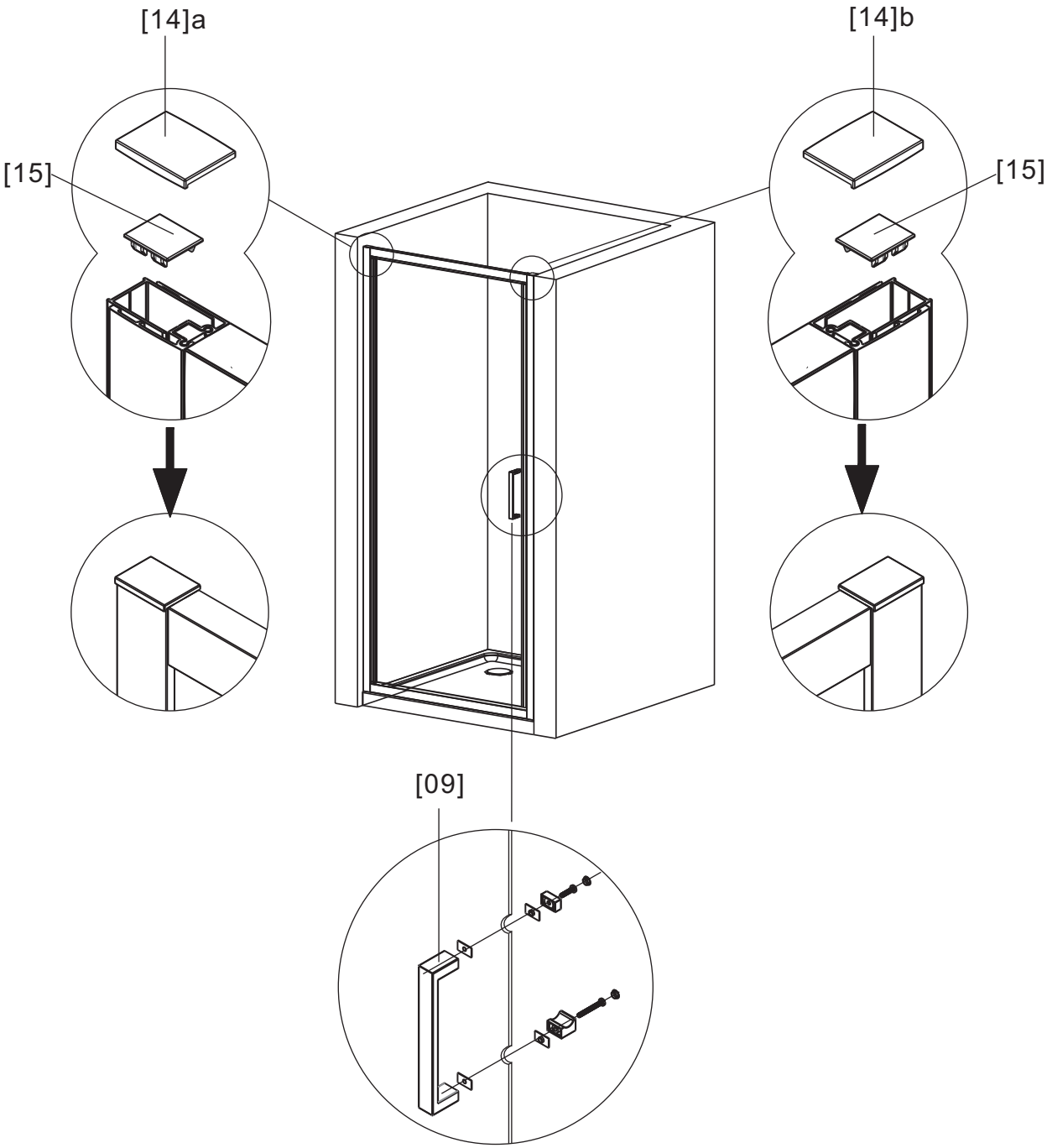

08

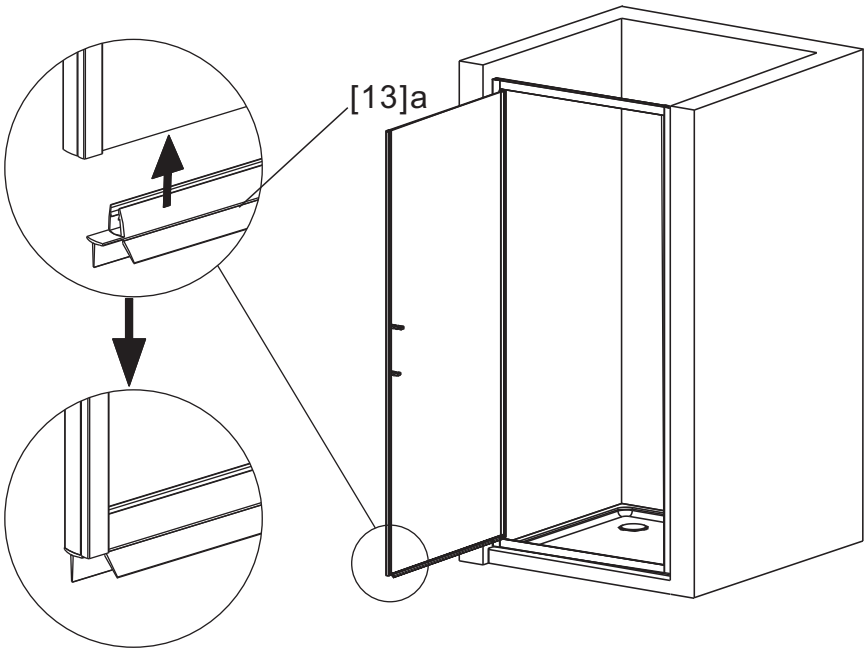

[13]ax1

[13]bx1

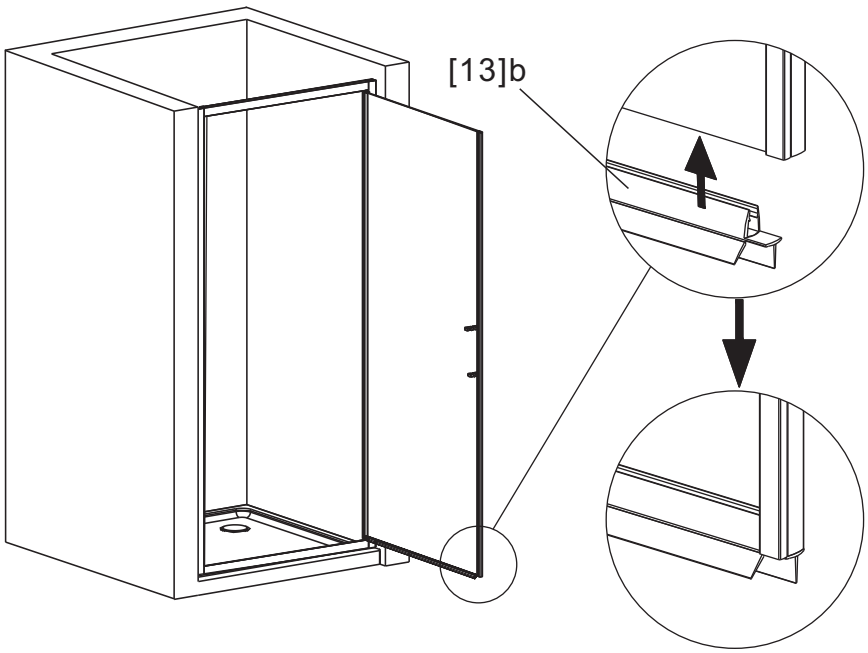
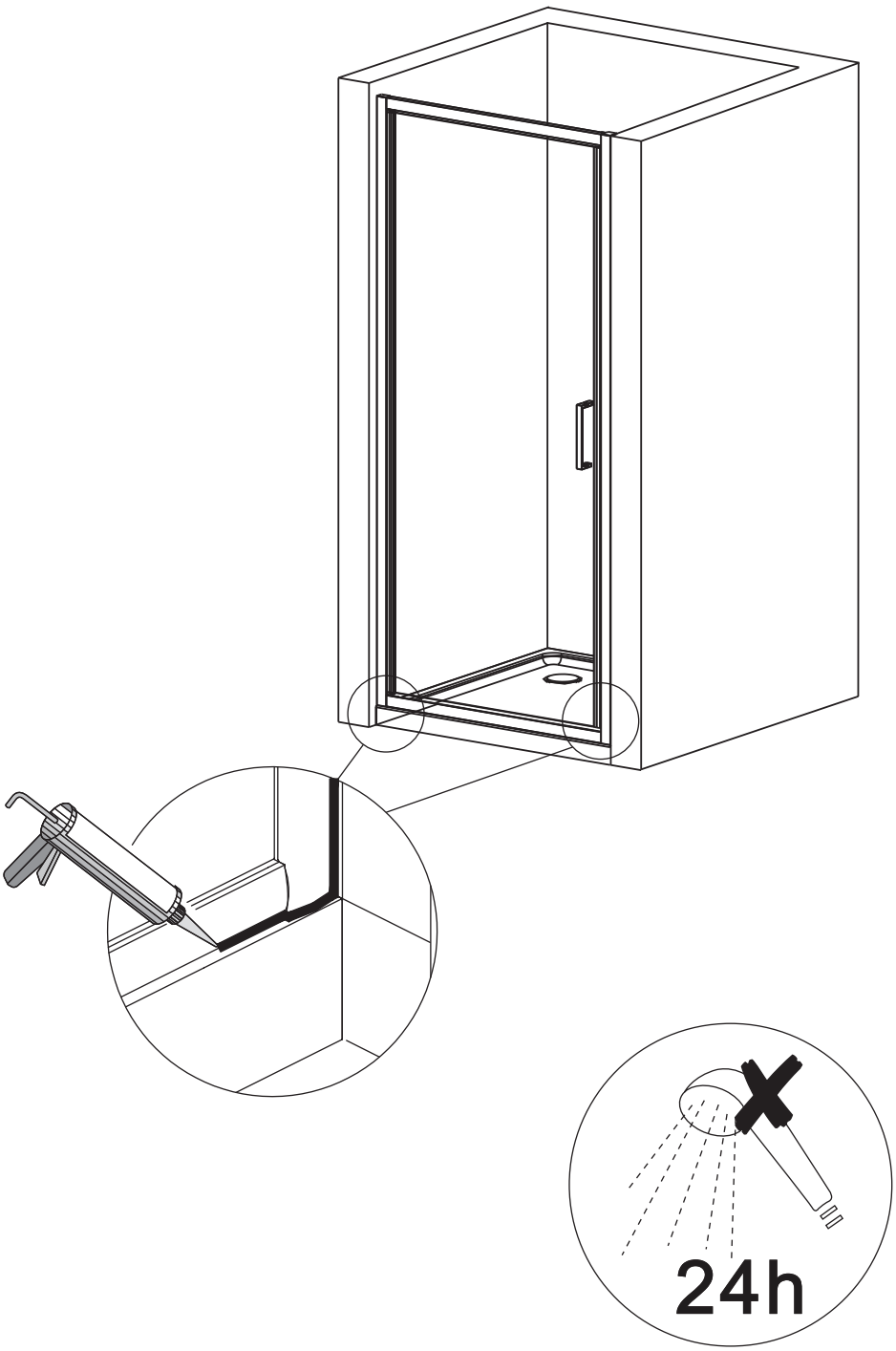
09